A reverse acting, two-pipe thermostat is required. Damper is normally closed. Optional reheat control will require a normally closed hot water valve or a normally open P.E. switch. As the space temperature decreases, the primary air damper modulates from maximum CFM setpoint to shut-off. When the primary air has decreased to a field adjustable CFM, the unit fan is energized thus supplying cold air mixed with ceiling plenum air to the space. If the space temperature continues to drop when the unit is supplying plenum air only, an optional electric heater or hot water coil valve is energized to satisfy load. When main air pressure is increased from 18 PSIG to 23 PSIG, the primary air damper remains closed for night setback operation.

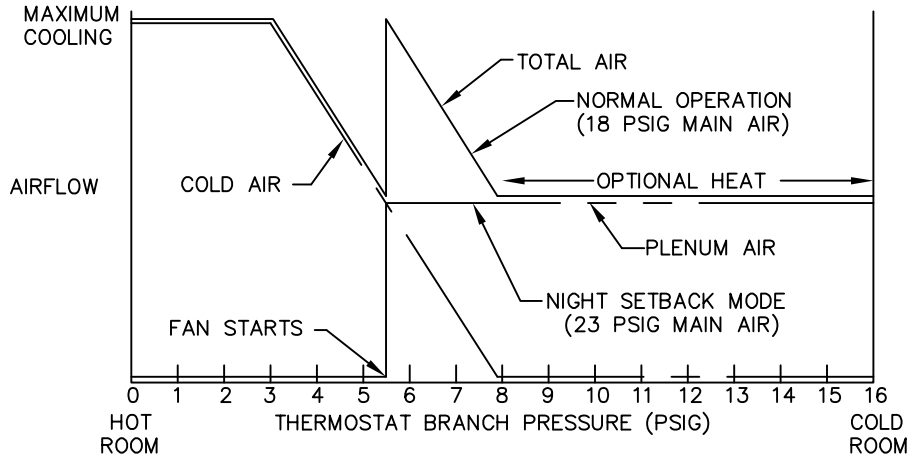

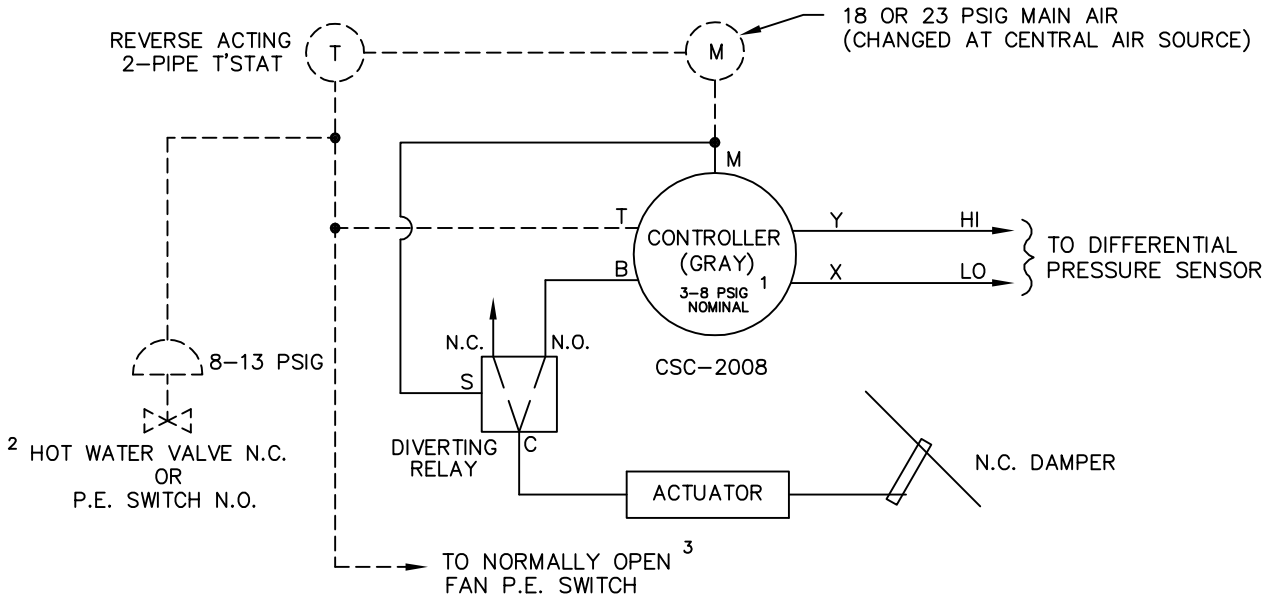

1 CONTROLLER REQUIRES FIELD CALIBRATION AND SETUP UNLESS OTHERWISE SPECIFIED. IF FACTORY CALIBRATION OPTION IS USED, THE RESET SPAN AND STARTPOINT WILL BE ADJUSTED AS SHOWN ABOVE UNLESS OTHERWISE SPECIFIED.

2 HOT WATER VALVE SUPPLIED BY OTHERS P.E. SWITCH IS INCLUDED IN ELECTRIC HEATER

3 REFER TO MOTOR WIRING DIAGRAM OR ELECTRICAL HEAT DIAGRAM (IF APPLICABLE).

——— FACTORY PIPING - - - - FIELD PIPING

PNEUMATIC AIR CONSUMPTION 0.5 SCFH

Johnson Controls	TITLE: FV405R PRESSURE INDEPENDENT PNEUMATIC CONTROLS	DRN BY: LARRY	DATE: 08/30/93	DRAWING NO. 16487
	THIS DRAWING CONTAINS PROPRIETARY DATA. UNAUTHORIZED DISCLOSURE, REPRODUCTION, OR USE IS STRICTLY PROHIBITED WITHOUT WRITTEN PERMISSION	CKD BY: WAE	DATE: 08/30/08 / REV: 03	

UNCONTROLLED WHEN PRINTED